LNRA Board Update on the Status of the NRS Engineers Feasibility Study

Presented at the November 2012 Board Meeting

28 November 2012

Site Location - South

1. Two options located in South Jackson County on, or adjacent to Formosa Plastics property.
2. Supplied by brackish ground water on/ in the vicinity of Formosa Plastics property
3. The desalination plant would treat water to meet Formosa Plastics raw water requirement, and could be available to supply potable water to area along FM 1593.

Site Location – South Option 1

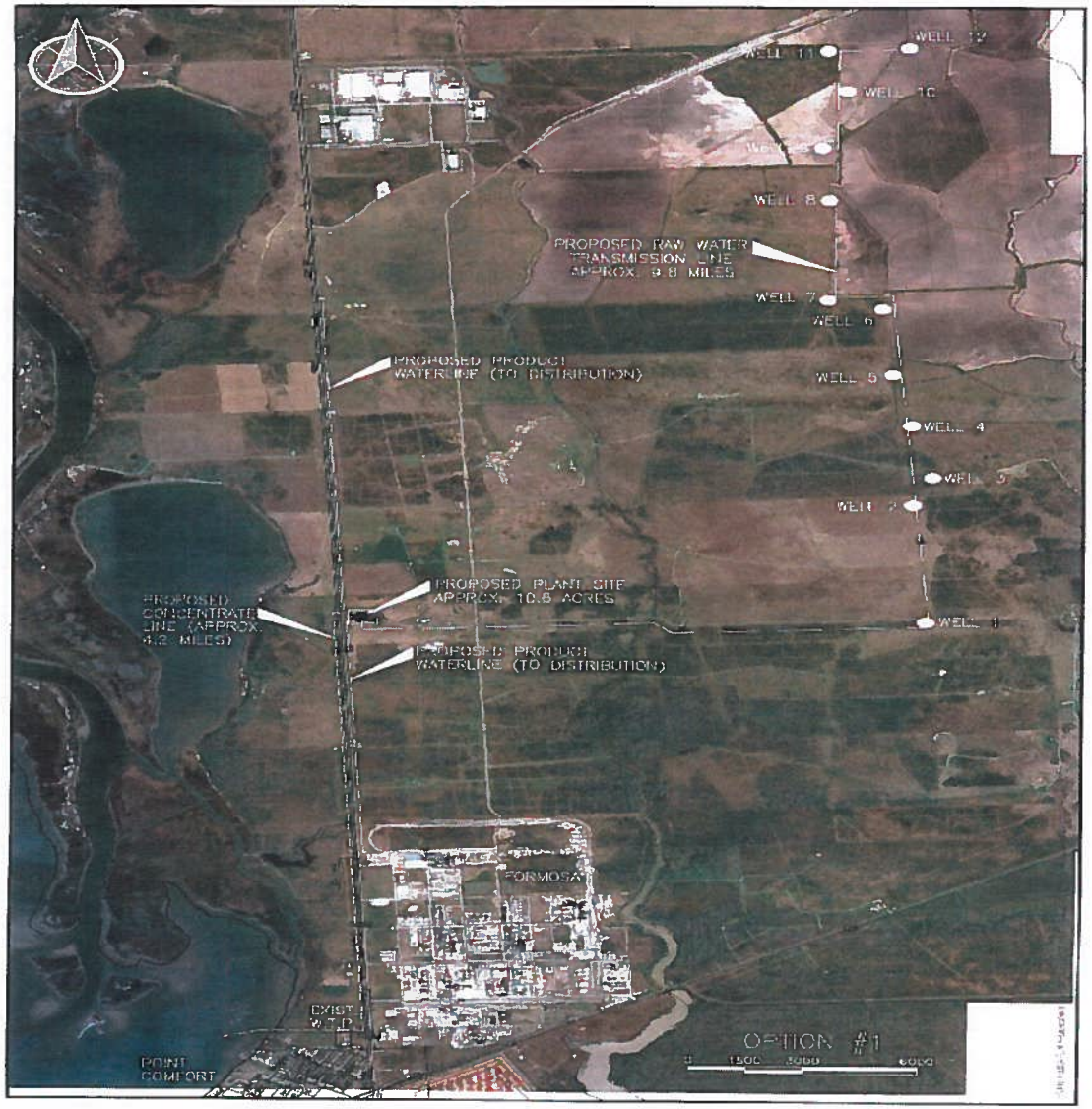

Site Location – South Option 2

Site Location - North

1. Located on LNRA property.
2. Supplied by brackish surface and ground water on LNRA property. (Conjunctive Use (CU))
3. The CU plant would treat more water to meet Formosa Plastics raw water requirement, and could be available to supply potable water to Central Jackson County.

Site Location - North

BGW Availability - South

1. 24 MGD is available but limited by permit rule to 13.5 MGD. (30,400 acres)
2. Reduced to 3.5 MGD by current pending 10 MGD Formosa GW permit request
3. A. 7.5 MGD -6 wells @ 300 – 700 feet
   B. 12 MGD – 8 wells @ 300 – 700 feet
   C. 24 MGD – 12 wells @ 300 – 700 feet
4. TDS from 1,000 to 5,000

BGW Availability - North

1. 7.5 MGD total available on an annual basis/15 MGD peak demand for up to 6 months (17,000 acres)
2. A. 7.5 MGD - 3 wells @ 1,400 – 3,000 ft.
   B. 10 MGD - 3 wells @ 1,400 – 3,000 ft.
   C. 15 MGD - 3 wells @ 1,400 – 3,000 ft.
3. TDS from 1,000 to 5,000

Surface Water Availability

1. Surface water is available from the tidal stream of the Navidad River during certain periods of the year.
2. TDS from 200-300 during flood conditions, and up to 20,000 TDS with no water over the dam.
3. Available water volume is not currently known, and will require additional study to confirm this amount.

RO Plant Process

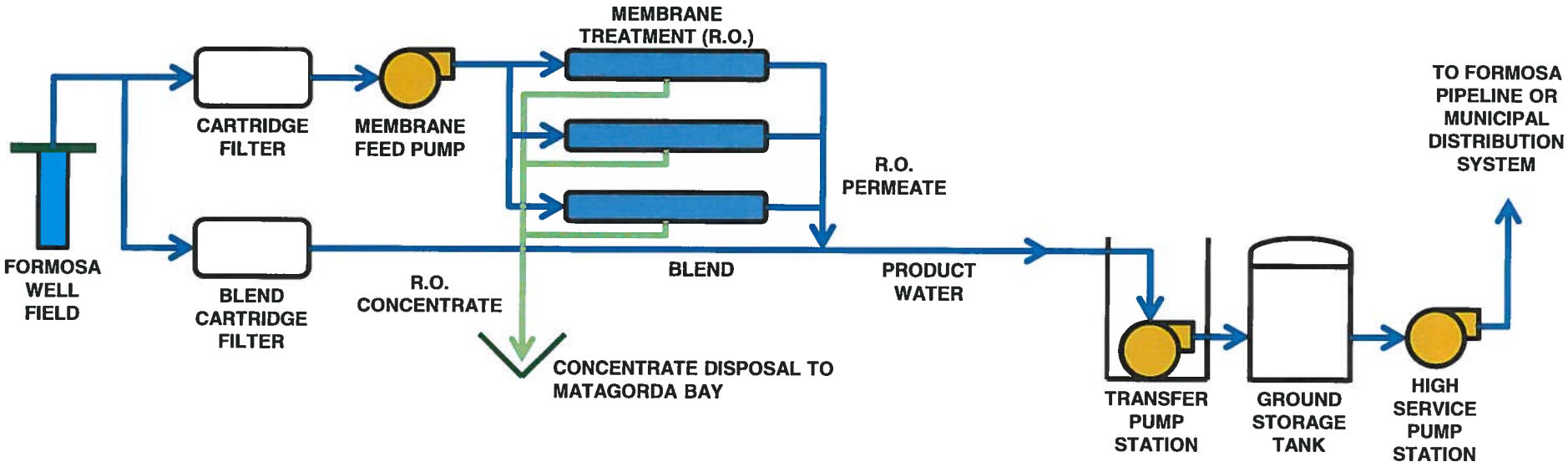

RO Plant Costs

Estimated Construction Cost

	7.5 MGD RO	12 MGD RO	24 MGD RO
Engineering	$ 3,555,000.00	$ 4,614,040.00	$ 4,960,040.00
RO Plant	$ 17,812,500.00	$ 23,668,500.00	$ 33,468,500.00
Pipeline Connection	$ 287,500.00	$ 287,500.00	$ 287,500.00
Well Field	$ 8,400,000.00	$ 11,200,000.00	$ 16,800,000.00
Total	**$ 30,055,000.00**	**$ 39,770,040.00**	**$ 55,516,040.00**

RO Plant Costs

Estimated Operational Cost per 1,000 Gallons

	7.5 MGD RO	12 MGD RO	24 MGD RO
Debt Service @6% for a 40 Year Term	$ 0.73	$ 0.60	$ .42
RO Plant Operations Cost per 1,000 Gallons	Includes Power at $0.10/$.02 per KWH, Manpower, Chemicals, and Maintenance	Includes Power at $0.10 per KWH, Manpower, Chemicals, and Maintenance	Includes Power at $0.10 per KWH, Manpower, Chemicals, and Maintenance
RO Operating Cost per 1,000 Gallons	$ 1.00 / $ 0.42	$ 1.00 / $ 0.42	$ 1.00 / $ 0.42
Total Operating Cost per 1,000 Gallons	**$ 1.73 / $ 1.15**	**$ 1.60 / $ 1.02**	**$ 1.42 / $ 0.84**

CU Plant Process

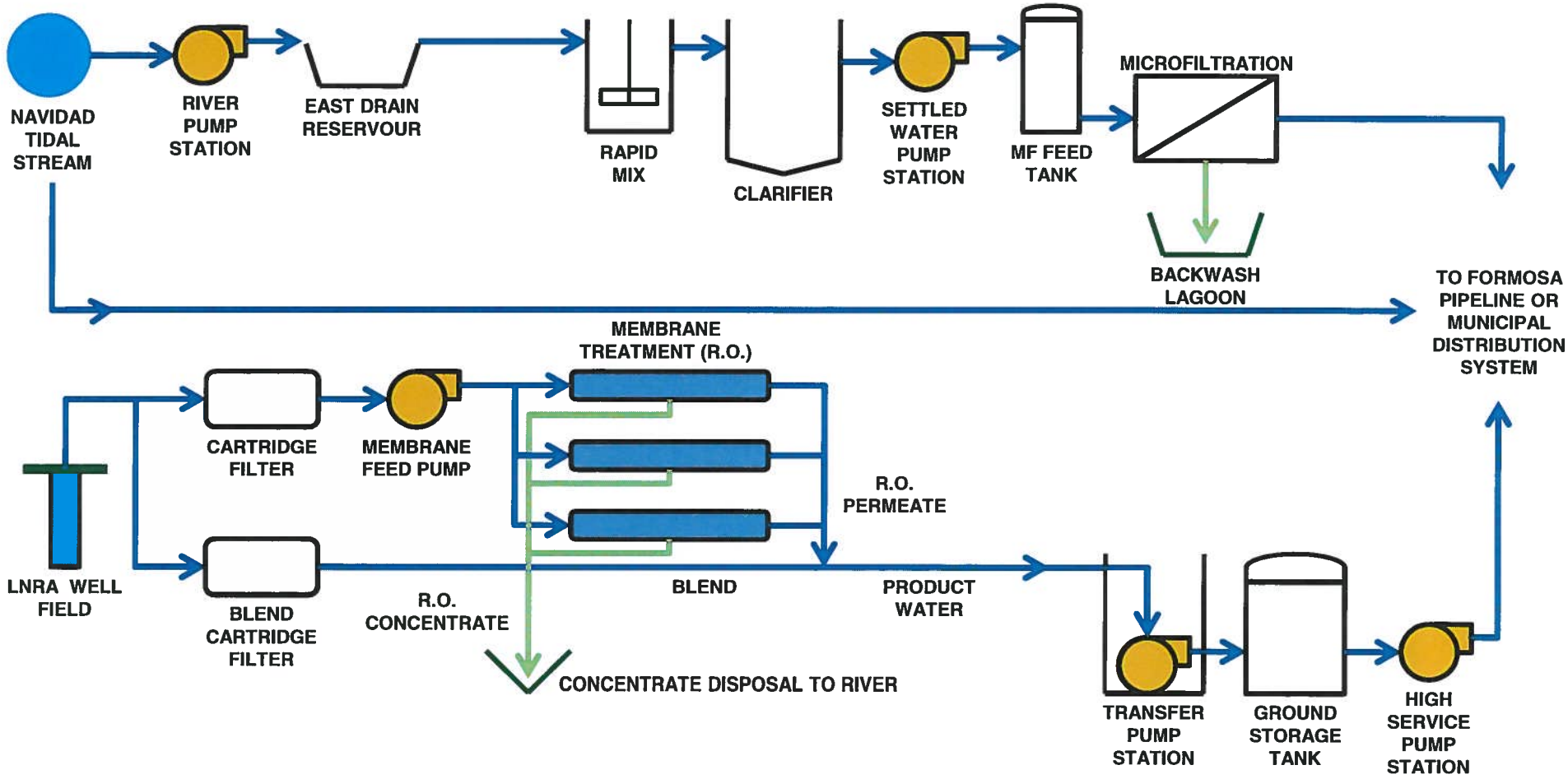

CU Plant Costs

Estimated Construction Cost

	7.5 MGD RO/7.5 MGD MF	10 MGD RO/10 MGD MF	15 MGD RO/15 MGD MF
Engineering	$ 3,997,000.00	$ 4,906,000.00	$ 5,100,000.00
CU Plant	$ 27,138,000.00	$ 35,238,500.00	$ 52,538,500.00
Pipeline Connection	$ 287,500.00	$ 287,500.00	$ 287,500.00
East Drain Reservoir	$ 1,300,000.00	$ 1,300,000.00	$ 1,300,000.00
River Inlet Works	$ 2,500,000.00	$ 2,500,000.00	$ 2,500,000.00
Well Field	$ 9,000,000.00	$ 12,000,000.00	$ 15,000,000.00
Total	**$ 44,222,500.00**	**$ 56,232,000.00**	**$ 76,726,000.00**

CU Plant Costs

Estimated Operational Cost per 1,000 Gallons

	7.5 MGD RO/7.5 MGD MF	10 MGD RO/10 MGD MF	15 MGD RO/15 MGD MF
Debt Service @6% for a 40 Year Term	$ 1.07	$ 1.00	$ .93
CU Plant Operations Cost per 1,000 Gallons	Includes Power at $0.10 / $.02 per KWH, Manpower, Chemicals, and Maintenance	Includes Power at $0.10 / $.02 per KWH, Manpower, Chemicals, and Maintenance	Includes Power at $0.10 / $.02 per KWH, Manpower, Chemicals, and Maintenance
MF Operations Cost	$ 0.58 / $ 0.33	$ 0.58 / $ 0.33	$ 0.58 / $ 0.33
RO Operating Cost	$ 1.00 / $ 0.42	$ 1.00 / $ 0.42	$ 1.00 / $ 0.42
Average Operating Cost	$ 0.79 / $ 0 .38	$ 0.79 / $ 0 .38	$ 0.79 / $ 0 .38
Total Operating Cost per 1,000 Gallons	**$ 1.86 / $ 1.45**	**$ 1.79 / $ 1.38**	**$ 1.72 / $ 1.31**

Recommendation

1. Given the current rules, or uncertainty thereof, governing the development and production of brackish groundwater in Jackson County, the North location meets the objectives of this study and should be considered for further evaluation. However, the South location would provide a reasonable approach to serving the municipal and industrial needs along the FM 1593 corridor from Lolita to Point Comfort and should not be discounted. If LNRA and the TGWCD are able to work through the local issues surrounding brackish water development, the South location would be the most cost effective approach to producing an additional water supply and an added drought protection for current surface water supplies.
2. NRS Engineers recommends proceeding with the required next steps in the sequence presented in the Implementation Plan.
3. Continue to work with Texana Groundwater Conservation District on Brackish Groundwater differentiation.

Implementation Next Steps

1. Detailed Surface Water Study @ Budget of $85 -$100K
2. Detailed Ground Water Study @ Budget of $90-$110K
3. Uncontested Environmental and Permitting Report @ Budget of $350 - $375K
4. Test Well Installation @ Budget of $1.1 – $1.4M
5. Surface and Ground Water Pilot Study @ Budget of $600 - $750 K
6. Groundwater Rules Revision @ $115 - $150K

Summary

1. While NRS Engineers has proposed two viable options, since brackish ground water is a component, LNRA will need to work with TGWCD to fully realize the potential of either option.

2. Energy costs comprise approximately 60% of the total Operating Costs. As demonstrated, if LNRA were able to negotiate a fee for energy of $0.02/KWH, that would provide a substantial reduction in total operating costs.

3. Execution in Q1 of 2013 of at lest the first two steps of the implementation plan will facilitate continued progress in the development of this initiative.